LIFTMOULD

SAS

MLS 50 T

IMPORTANT NOTICE/

To fix on the mold, it is Mandatory to use CHC M24 screws class 12.9.

Tightening torque 109,5daN.m.

LIFTMOULD will not provide these screws.

Each lifting pin must be placed on the mold gravity center.

«MLS 50T» is developed to lift and transport the mold. Once lifted, do not use them to tilt the mold.

Registered Design According to standards: CE 2006/42/CE

WARNING:

ASSEMBLING «MLS 50T» ON YOUR TOOLS, YOU ARE EQUIPPING YOUR MOLDS WITH A SYSTEM DEVELOPED, DIMENSIONED AND CONSTRUCTED ACCORDING TO EEC STANDARDS. PLEASE REFER TO THE HEREINAFTER CATALOG.
IN CASE YOU CHOOSE TO INSTALL A COPY OF «MLS 50T» (NOT PROVIDED BY LIFTMOULD OR ONE OF OUR OFFICIAL DISTRIBUTORS), LIFTMOULD CANNOT BE HELD RESPONSIBLE DOESN'T MATTER WHAT PROBLEM MAY OCCUR.
ON THE ABOVE MENTIONED CASE, NO LEGAL OR PENAL RESPONSIBILITY CAN BE ADDRESSED TO LIFTMOULD AND ITS OFFICIAL DISTRIBUTORS.

LIFTMOULD
SAS

PIN 5 T

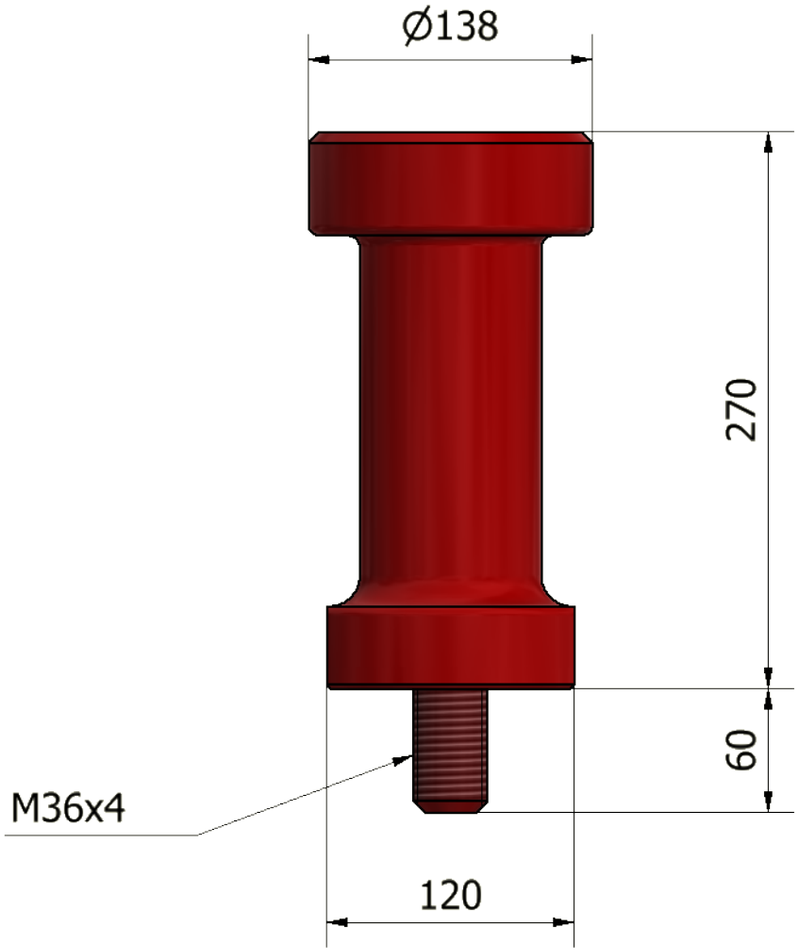

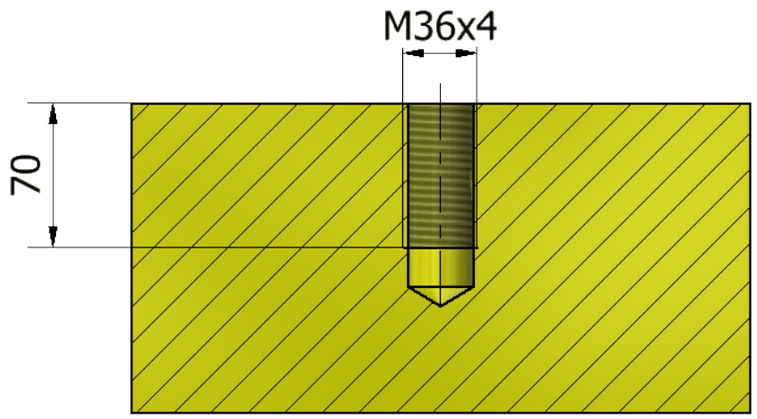

MOLD

LIFTMOULD
SAS

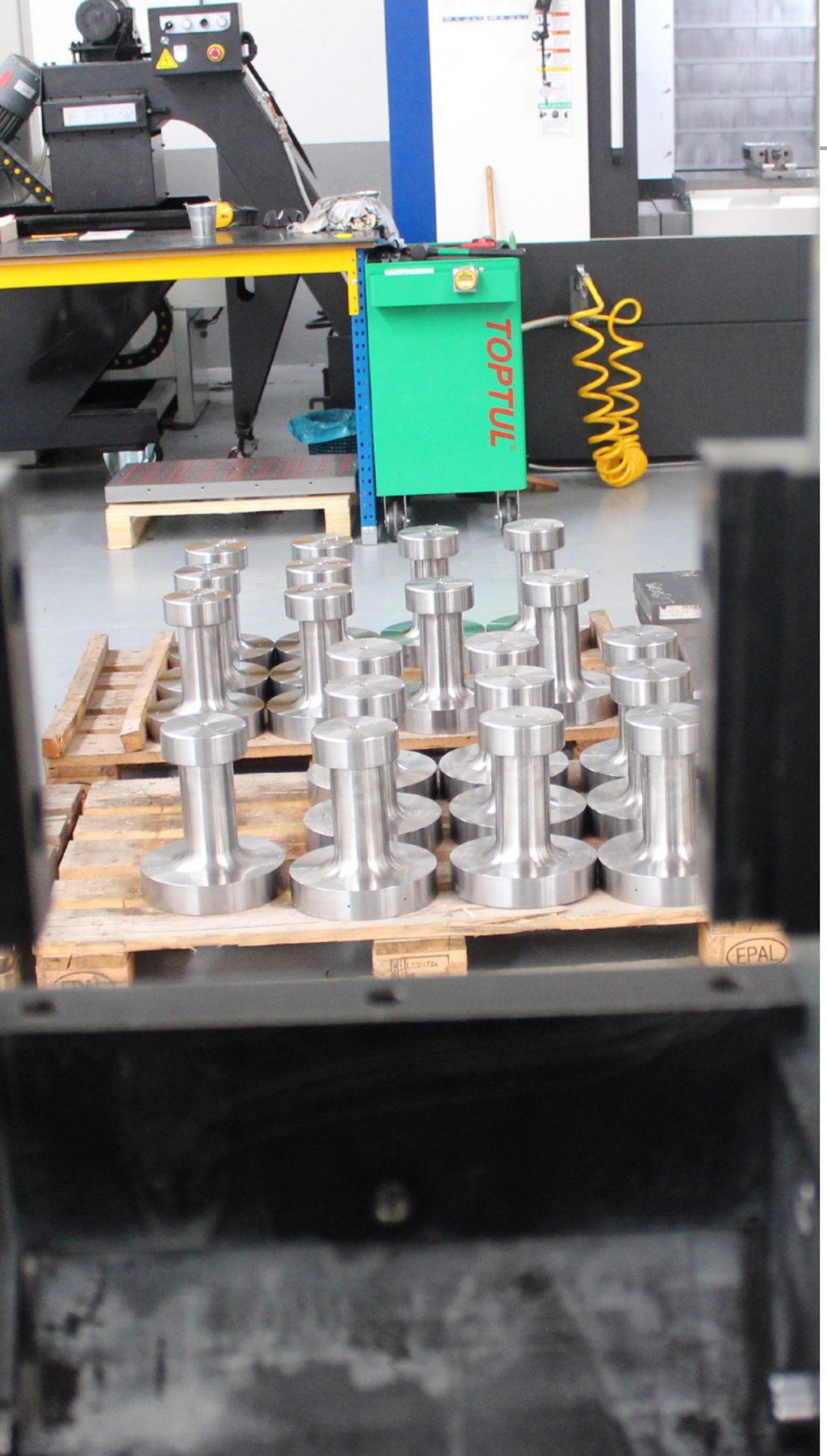

PIN 5 T

LIFTING PIN TO SUPPORT UP TO 5T

TIGHTENING TORQUE 25DAN/M

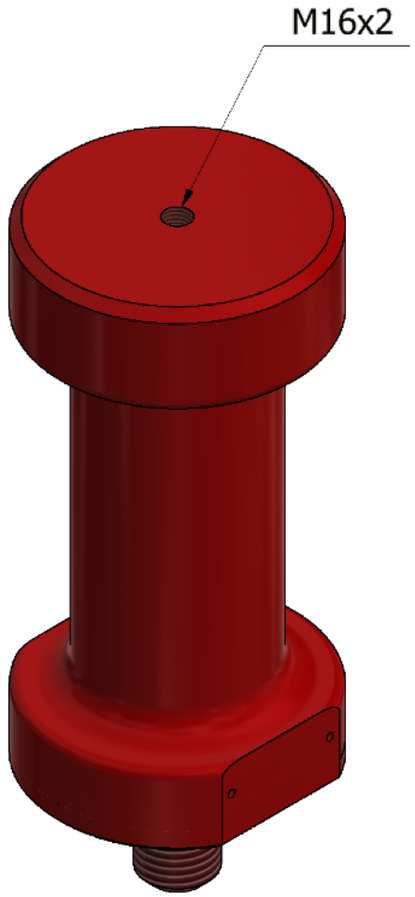

LIFTMOULD
SAS

CONTACT

PHONE: +33 (0)1 30 27 21 89

PHONE: +33 (0)1 30 37 31 58

MAIL: COMMERCIAL@LIFTMOULD.COM

YOUTUBE: LIFTMOULD

COMMERCIAL OFFICE:
LIFTMOULD SAS
ZI DES BÉTHUNES
14 RUE DU COMPAS
BP 20433
SAINT OUEN L' AUMÔNE
95005 CERGY PONTOISE CEDEX
FRANCE

FACTORY:
LIFTMOULD LTDA
ZONA INDUSTRIAL OIA
PORTUGAL